Part No. **AS6030-E-2500-060-S**

Type EI60/30.5 Power 25.0VA Weight 780g

shipping unit per box: 10 PCS. temperature class: ta 70℃/B

Vacuum filled casting

Split bobbin design winding

Dielectric strength 4500Vrms

PART NO	Output ta 70℃/B	Prim.V	Connecting pins	Operating point sec. ± 10%	Connecting pins	No-load voltage ± 10%
AS6030-E-2500-060-S	25.0W	230	1--7	6V 4166.6mA	9--13	7.5V

According to

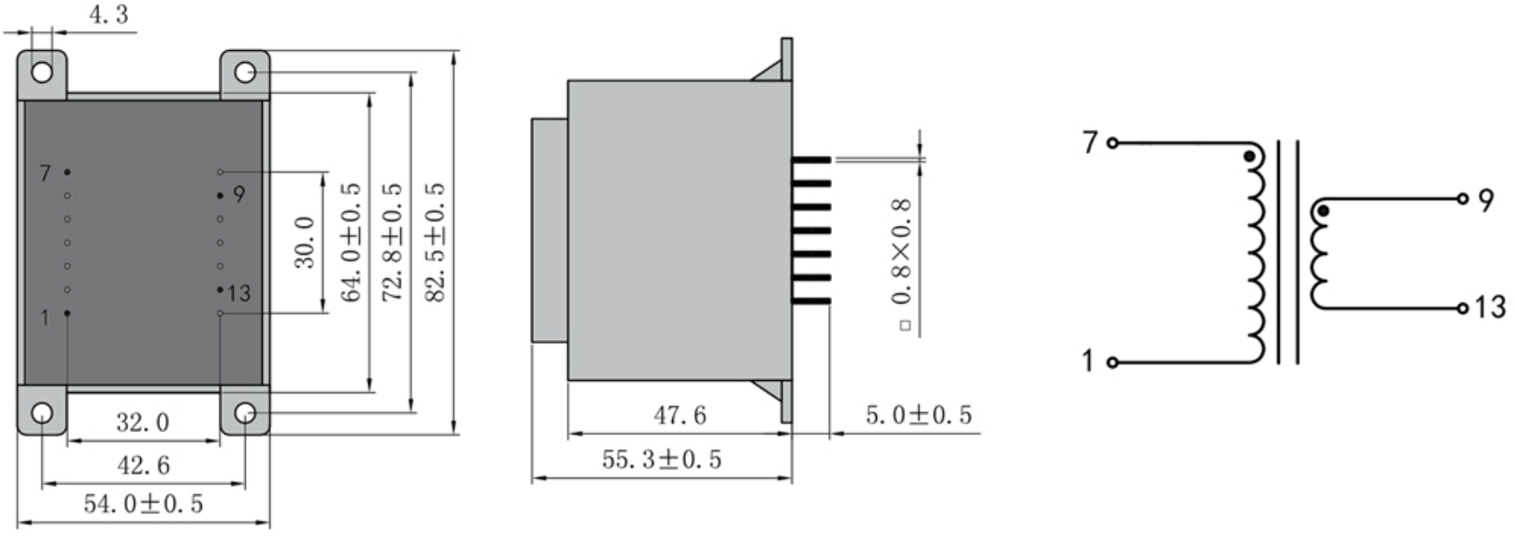

Dimensions with no indication of tolerances: ± 0.3mm
Custom-made transformer also will be welcome.

ADD: 699 Fangzhou Road Xiongzhou Town Luhe District 211500 Nanjing City Jiangsu China
TEL: +86 25 57120866 / 57120966 - 8001 FAX:+86 25 57118989
E-mail: asn@asn.cn / asn@asntransformer.com
http://www.asntransformer.com